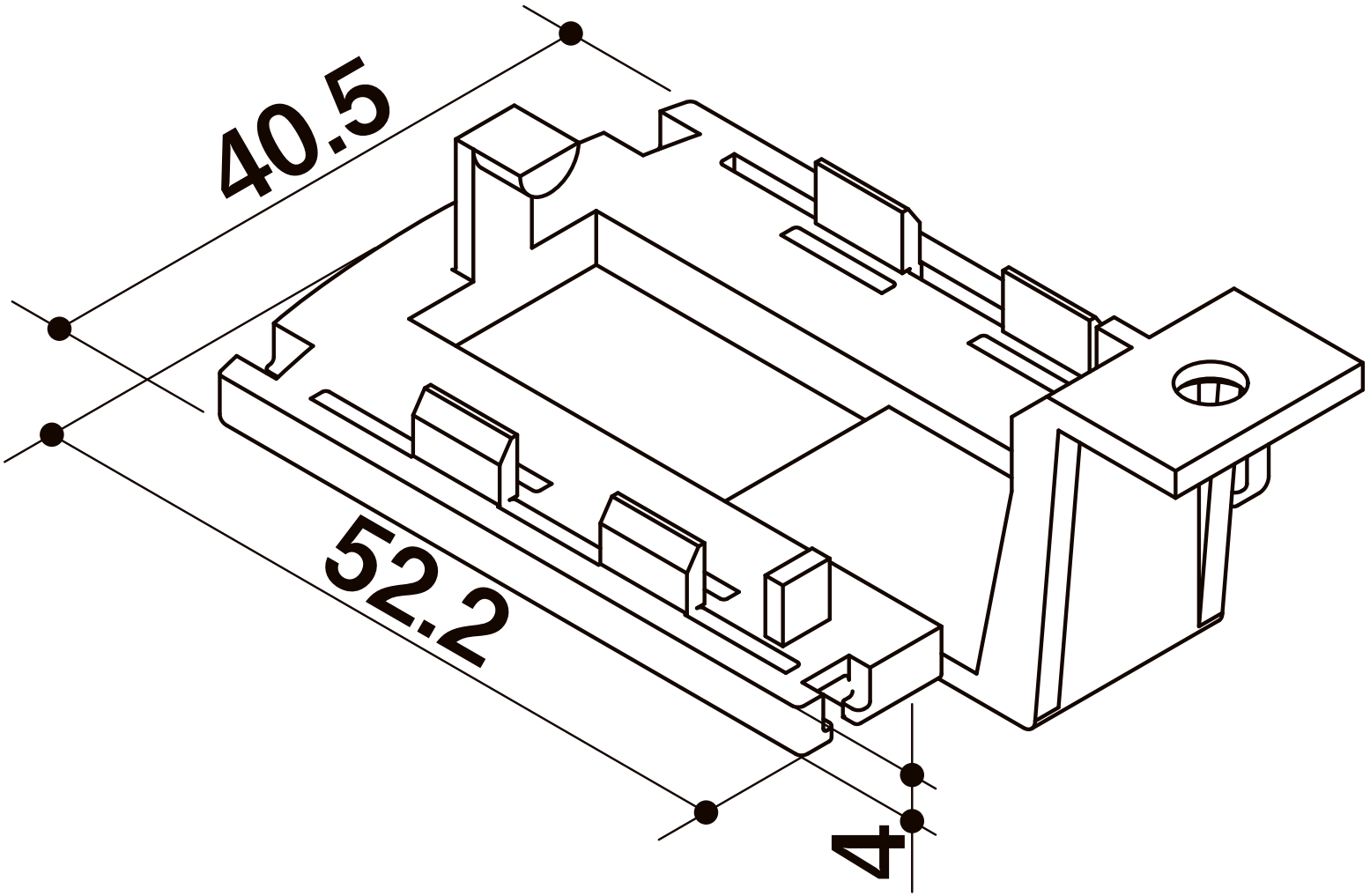
40.5
52.2
4