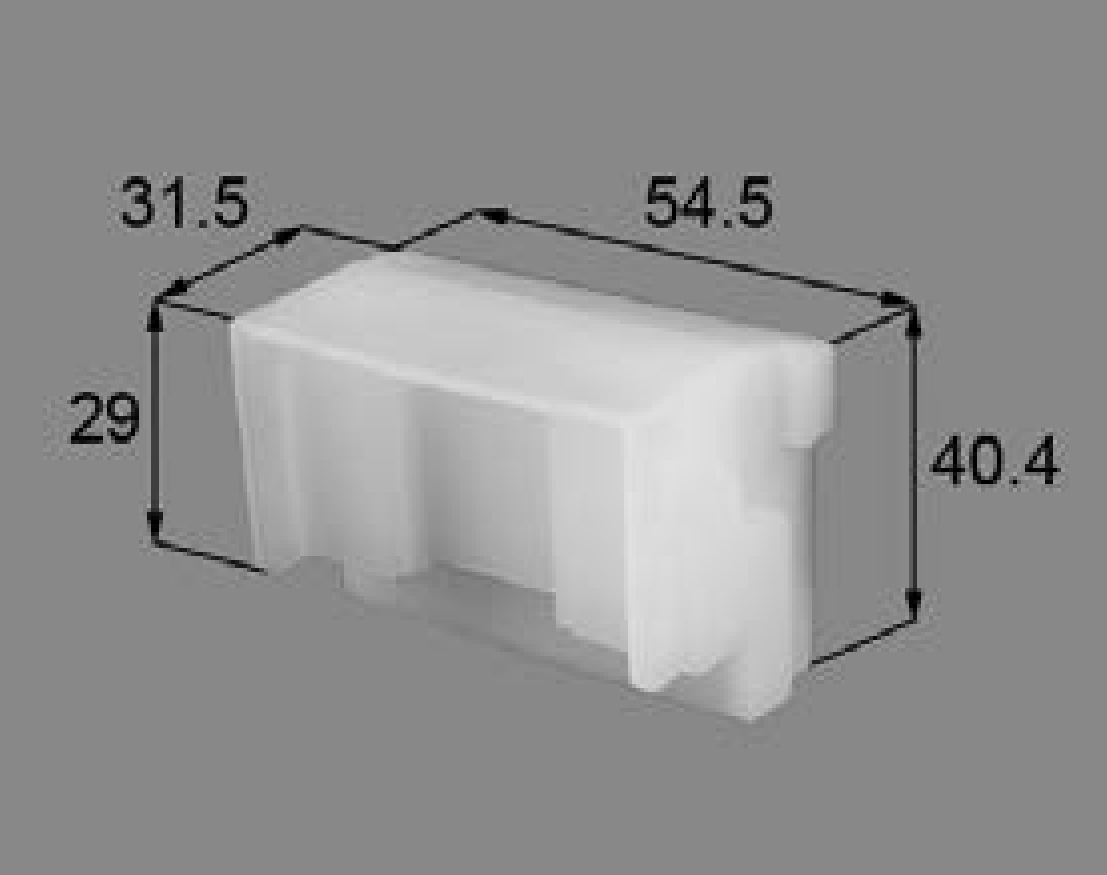
31.5
54.5
29
40.4