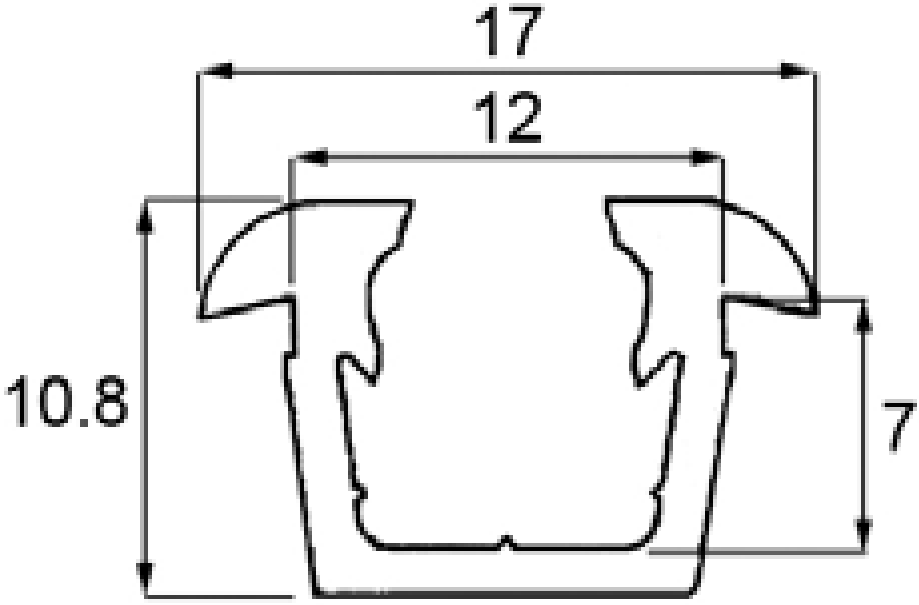
17
12
10.8
7